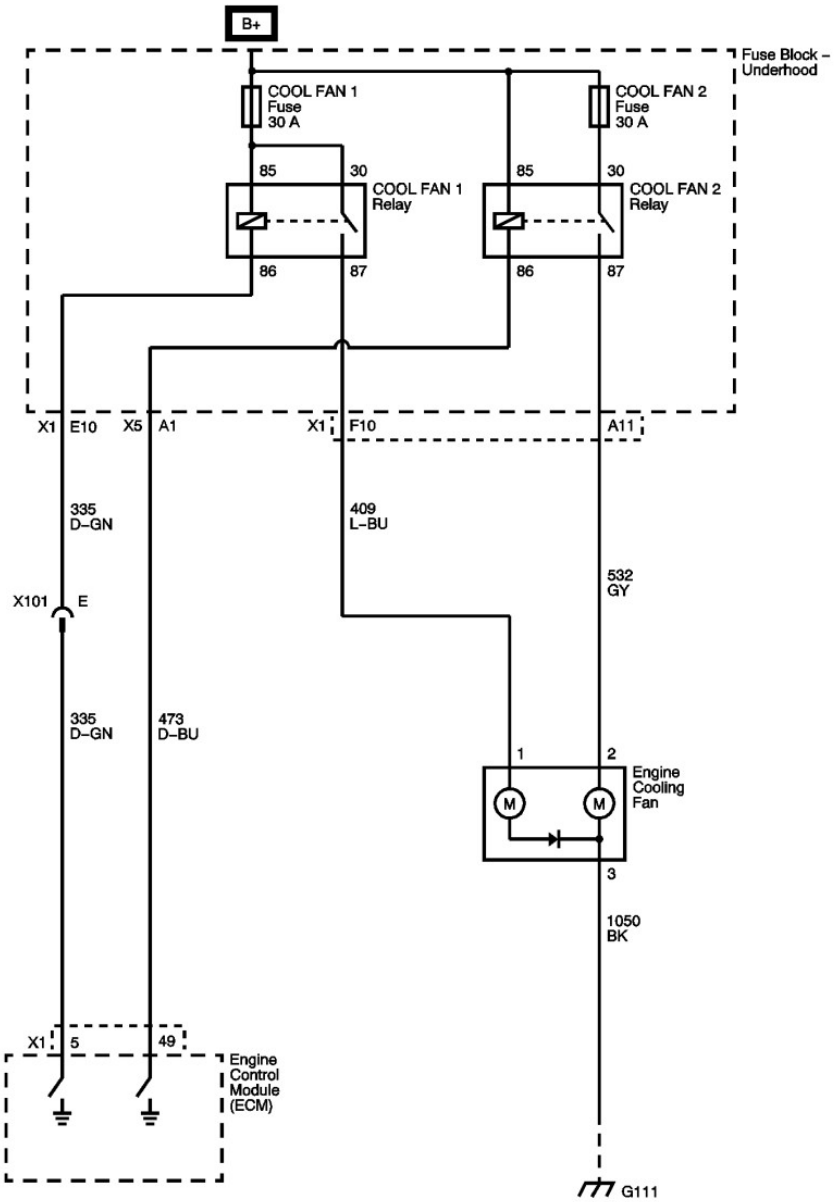

© 2019 General Motors. All rights reserved.